Wheatstone

Wheatstone High-Temperature Motors



Motors can be customized to meet customer requirements

Contents
CONTENTS

01 Nomenclature and Classification of High-Temperature Motors

02 High-Temperature Motor Testing Equipment

03 High-Temperature Motor Products

04 High-Temperature Motor Application Cases

Wheatstone

01 High-Temperature Motor Testing Equipment

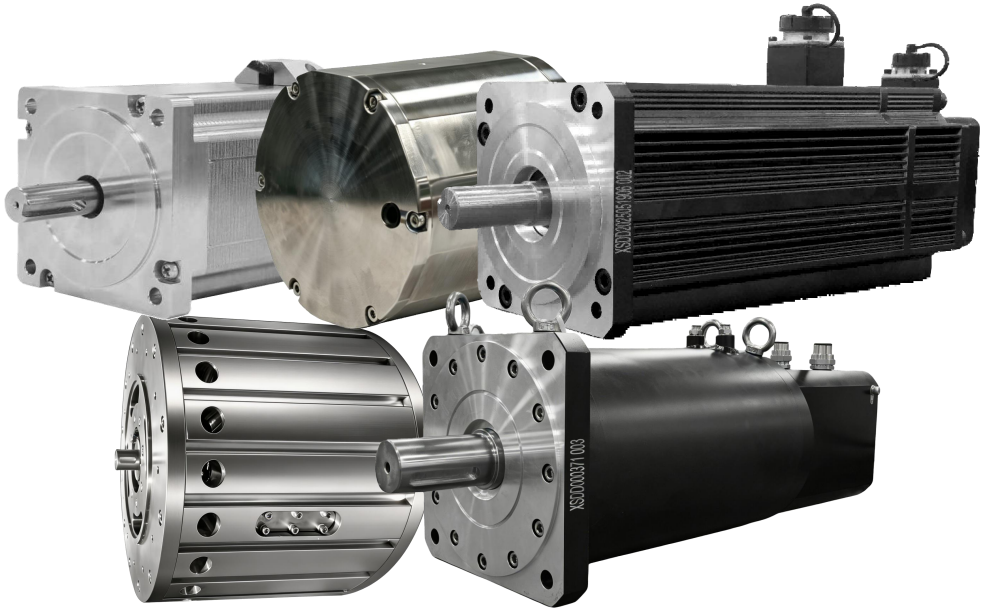

Wheatstone High-Temperature Motor Nomenclature

Wheatstone

H1-L1 / 1 -F1 / 2 -Z1 / 3 -S1 / 4

No.	Item	Detailed Description
1	Temperature Range	H1 = high-temperature resistant 80°C H2 = high-temperature resistant 120°C H3 = high-temperature resistant 150°C H4 = high-temperature resistant 180°C H5 = high-temperature resistant 200°C H6 = high-temperature resistant 300°C L1 = low-temperature resistant -40°C L2 = low-temperature resistant -55°C L3 = low-temperature resistant -96°C L4 = low-temperature resistant -196°C (Customizable upon request)

Wheatstone High-Temperature Motor Classification

Wheatstone

Classified by Control Method

- High-Temperature Motors
  - High-Temperature Stepper Motor
  - High-Temperature Servo Motor
  - High-Temperature Permanent Magnet Motor

Classified by Rotor Structure / Principle

- High-Temperature Motors
  - High-Temperature Reluctance Motor
  - High-Temperature Induction Motor

WHEATSTONE HIGH-TEMPERATURE MOTOR CLASSIFICATION

1. H1 = Heat-resistant up to 80°C
2. H2 = Heat-resistant up to 120°C
3. H3 = Heat-resistant up to 150°C
4. H4 = Heat-resistant up to 180°C
5. H5 = Heat-resistant up to 200°C
6. H6 = Heat-resistant up to 300°C

Wheatstone

02 High-Temperature Motor Testing Equipment

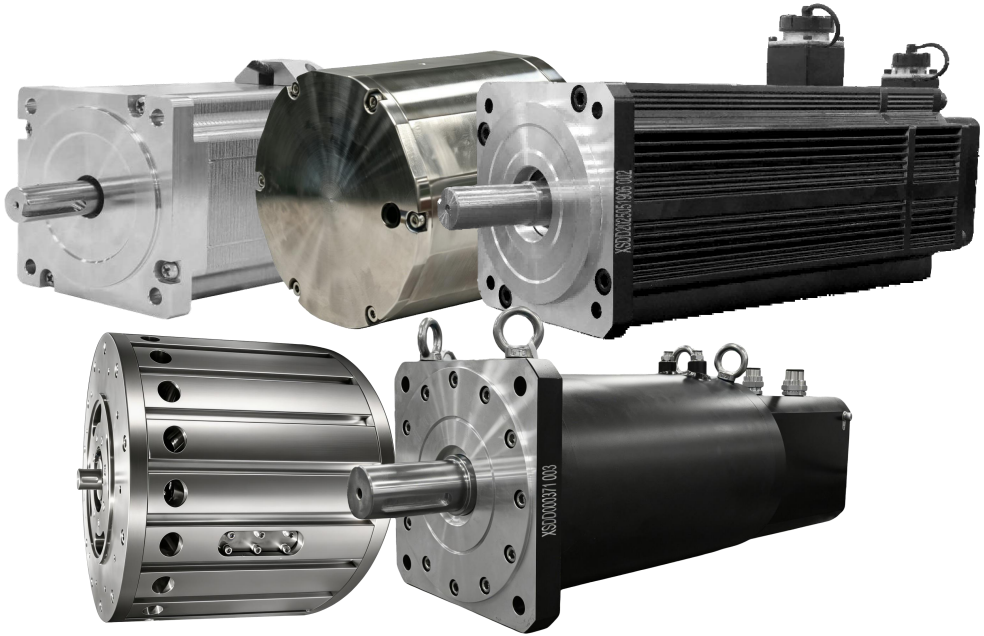

High-Temperature Motor Testing Equipment



Type Testing Laboratory

High/low temperature operation and storage, temperature shock, constant and alternating damp heat, low air pressure (25 kPa), temperature cycling + random vibration, and bulk road transportation. Fully covering the requirements of GB/T 28046.3, GJB 150A and other standards, it verifies structural integrity, insulation reliability and functional stability under multi-stress coupling such as extreme temperature and humidity, high-altitude low pressure, mechanical vibration and long-distance transportation.

High-



High/Low Temperature Alternating Damp Heat Test Chamber

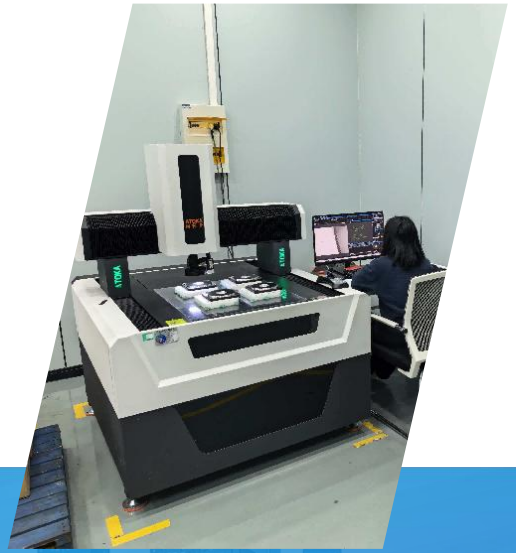

Fully Automatic Gantry Image Flash Measuring Instrumen



9K Rain Spray Test Chamber



Motor Performance Test



Electrodynamic Vibration Test

Company Testing Equipment



Loaded Performance Test System



High-Pressure Deep-Water Motor Test Chamber



Ultrasonic Flaw Detector



Burst Test Machine

03 High-Temperature Motor Products

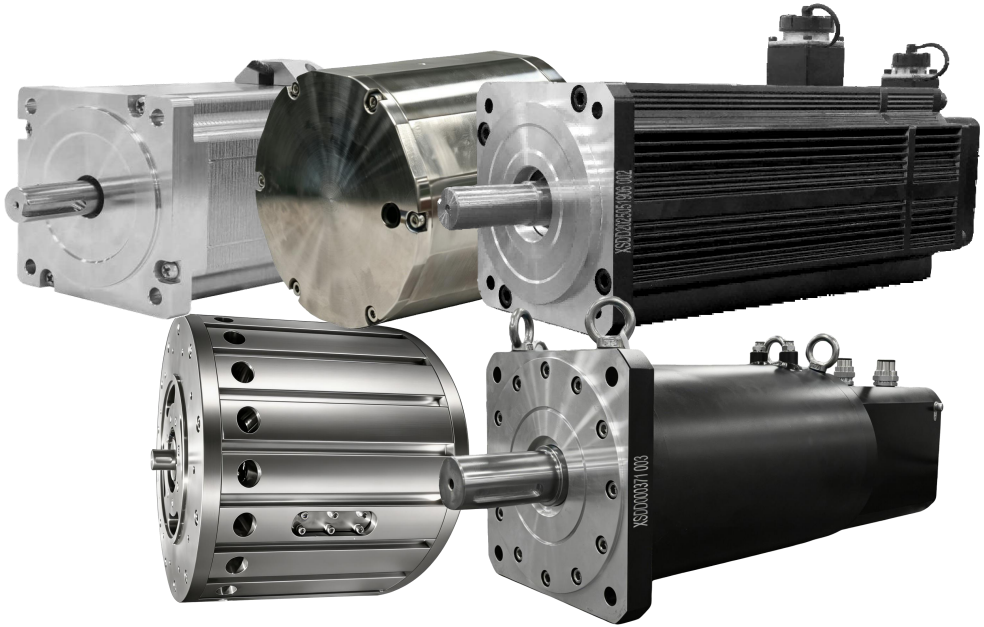

Wheatstone High-Temperature Stepper Motor



Motor Model	L(mm)
86BYG79-411GW	79
86BYG124-411GW	124
86BYG159-411GW	159
86BYG140-411GW	140





Item	Motor Parameters
Motor Frame	42/57/60/86/110/130
Rated Torque	2N.m/8N.m/9.2N.m/12N.m
Rated Current	6A
Radiation Resistance Level	5*10^3Gy
Insulation Class	C > 180°C
Ambient Temperature	-10°C ~ 200°C
Temperature Range	H1~H6

Wheatstone High-Temperature Stepper Motor Testing — Torque Test, Aging Test, High-Temperature Resistance Test Video



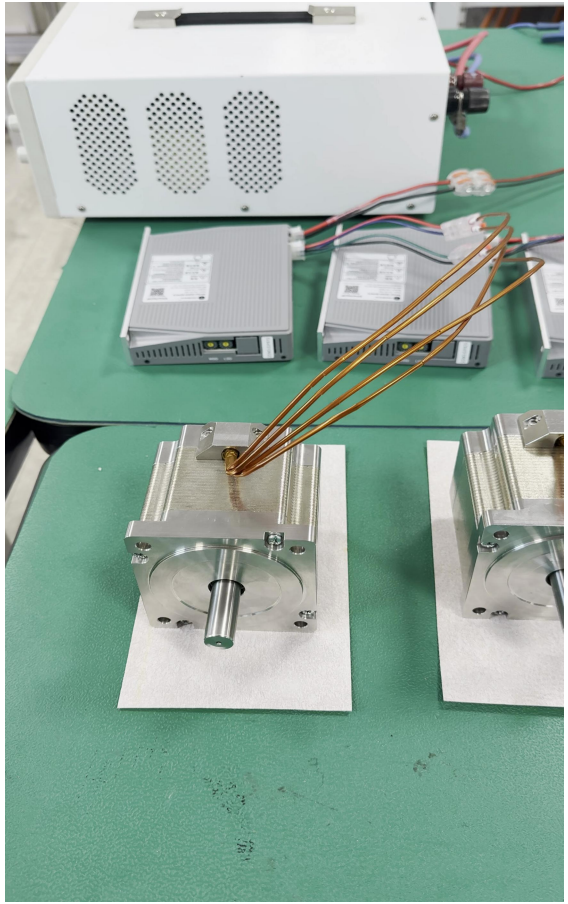



Wheatstone High-Temperature Permanent Magnet Motor (80°C)



Item	Motor Parameters
Motor Frame	40/60/80/110/130/150/180/220/260
Rated Power	0.8KW
Rated Torque	6.7N.m
Rated Current	2.6A
Rated Voltage	380VAC
Rated Speed	1200RPM
Insulation Class	Class C
Ambient Temperature	80°C

Wheatstone High-Temperature Permanent Magnet Motor Test Photos

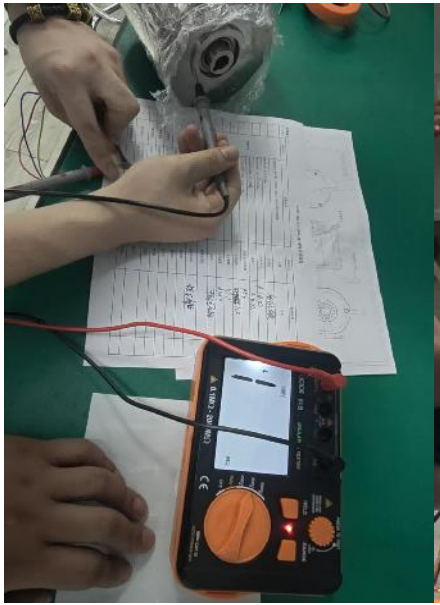







Insulation

Voltage Withstand

Vibration

Noise

Wheatstone High-Temperature Permanent Magnet Motor Test Video

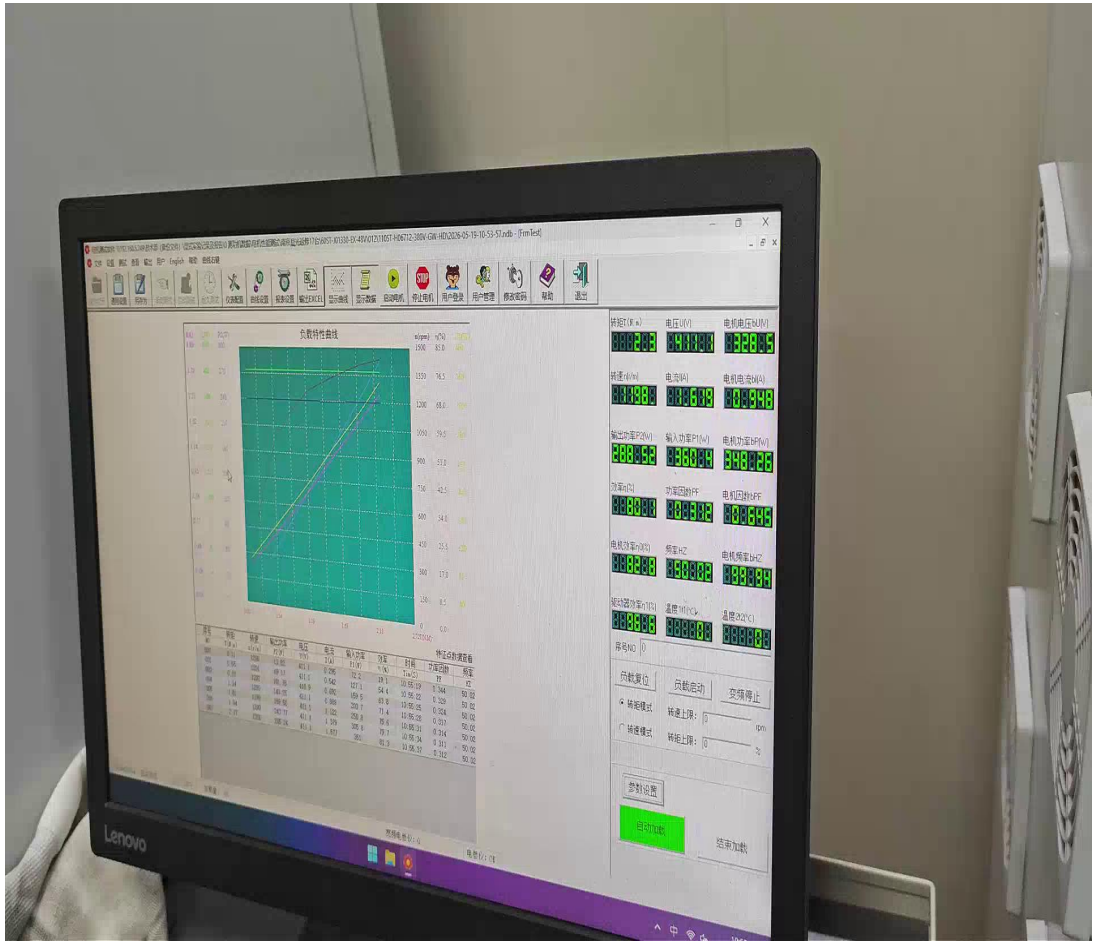



Wheatstone High-Temperature Permanent Magnet Motor Test Report

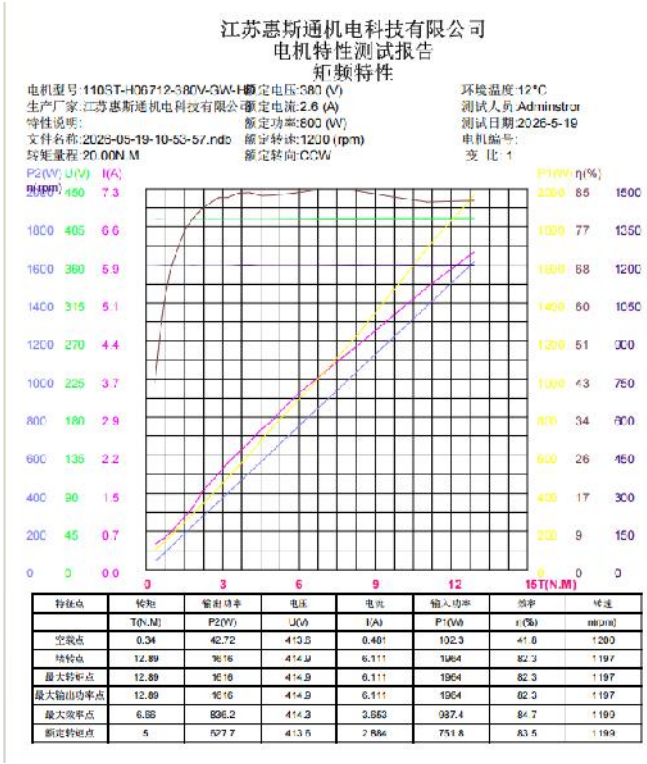

特征点	转矩	输出功率	电压	电流	输入功率	效率	转速
	T(N.M)	P2(W)	U(V)	I(A)	P1(W)	η(%)	n(rpm)
空载点	0.34	42.72	413.6	0.481	102.3	41.8	1200
堵转点	12.89	1616	414.9	6.111	1964	82.3	1197
最大转矩点	12.89	1616	414.9	6.111	1964	82.3	1197
最大输出功率点	12.89	1616	414.9	6.111	1964	82.3	1197
最大效率点	6.88	936.2	414.3	3.863	987.4	84.7	1199
额定转矩点	5	527.7	413.5	2.884	751.8	83.5	1199

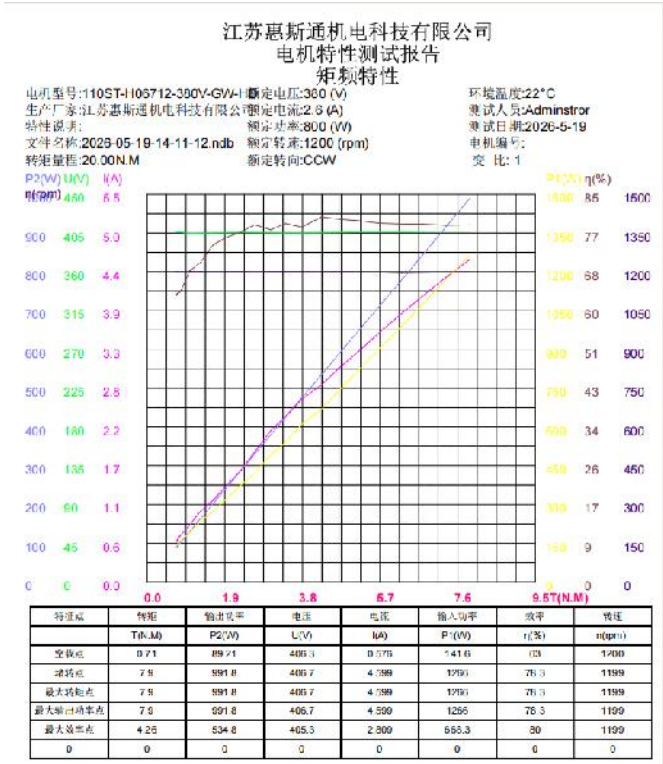

特征点	转矩	输出功率	电压	电流	输入功率	效率	转速
	T(N.M)	P2(W)	U(V)	I(A)	P1(W)	η(%)	n(rpm)
空载点	0.71	89.21	406.3	0.576	141.6	63	1200
堵转点	7.9	991.8	406.7	4.599	1266	78.3	1199
最大转矩点	7.9	991.8	406.7	4.599	1266	78.3	1199
最大输出功率点	7.9	991.8	406.7	4.599	1266	78.3	1199
最大效率点	4.26	534.8	405.3	2.809	666.3	80	1199
0	0	0	0	0	0	0	0

120°C

140°C

Wheatstone High-Temperature Servo Motor (80°C)

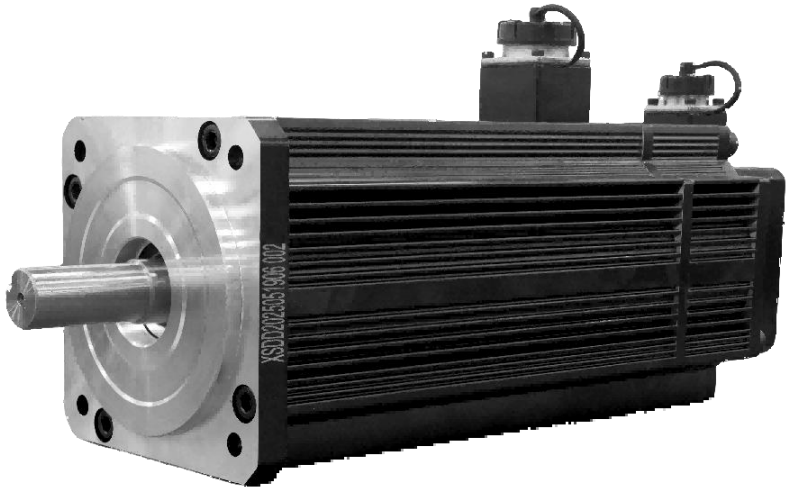

Item	Motor Parameters
Motor Frame	40/60/80/110/130/150/180/220/260
Rated Power	2.3KW
Rated Torque	15N.m
Rated Current	5.3A
Rated Speed	1500RPM
Insulation Class	F 155°C
Ambient Temperature	-10°C ~ 80°C

Wheatstone High-Temperature Servo Motor (75°C)



Item	Motor Parameters
Motor Frame	40/60/80/110/130/150/180/220/260
Rated Power	15KW
Rated Torque	100N.m
Rated Current	35A
Rated Speed	1500RPM
Insulation Class	F 155°C
Ambient Temperature	-20°C ~ 75°C
Cooling Method	Liquid Cooling

Wheatstone High-Temperature Servo Motor
h-Ter





Wheatstone High-Temperature Servo Motor (155°C)





Motor Model	L(mm)
90ST-X03510F	157.5
130ST-X10020F-D/SJ	283
180ST-X28010F	391

Item	Motor Parameters
Motor Frame	90/130/180
Rated Power	0.35KW~2.8KW
Rated Torque	3.5N.m~28N.m
Rated Current	1.5A~11A
Rated Speed	1000~2000RPM
Insulation Class	F 155°C / Class B

Wheatstone High-Temperature Reluctance Motor



Item	Motor Parameters
Motor Frame	400/450 and above
Rated Power	22KW
Rated Torque	140N.m
Rated Current	70A
Rated Speed	1500RPM
Insulation Class	Class C
Ambient Temperature	200°C
Rated Frequency	100HZ

Wheatstone High-Temperature Reluctance Motor Testing — High-Temperature Test

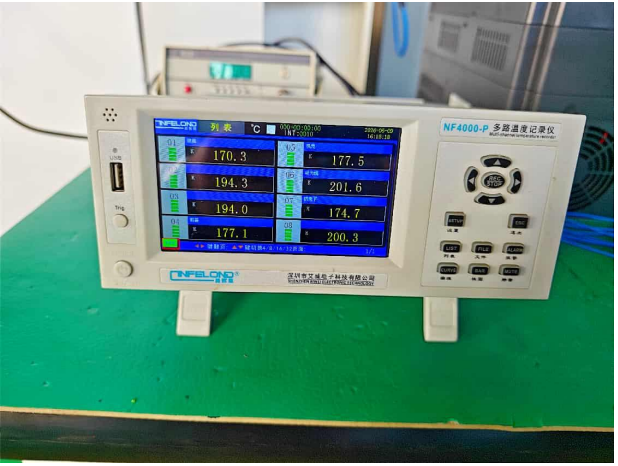





Wheatstone High-Temperature Reluctance Motor Test Report

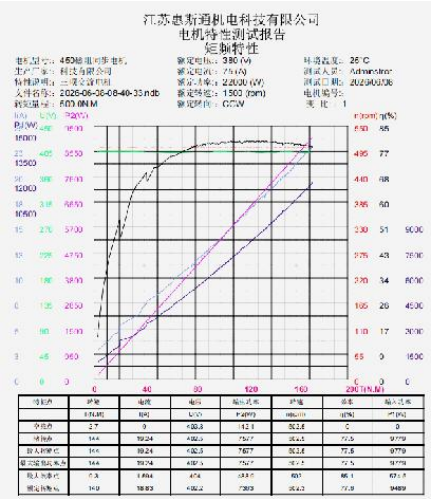

500RPM

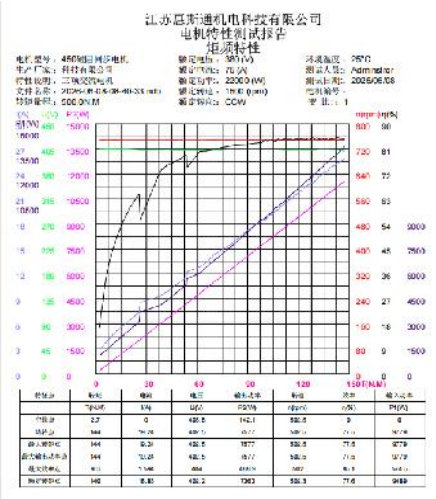

750RPM



1000RPM

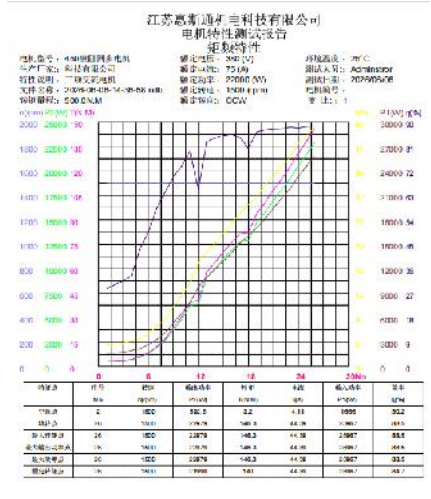

1500RPM

Wheatstone

04 High-Temperature Motor Application Cases

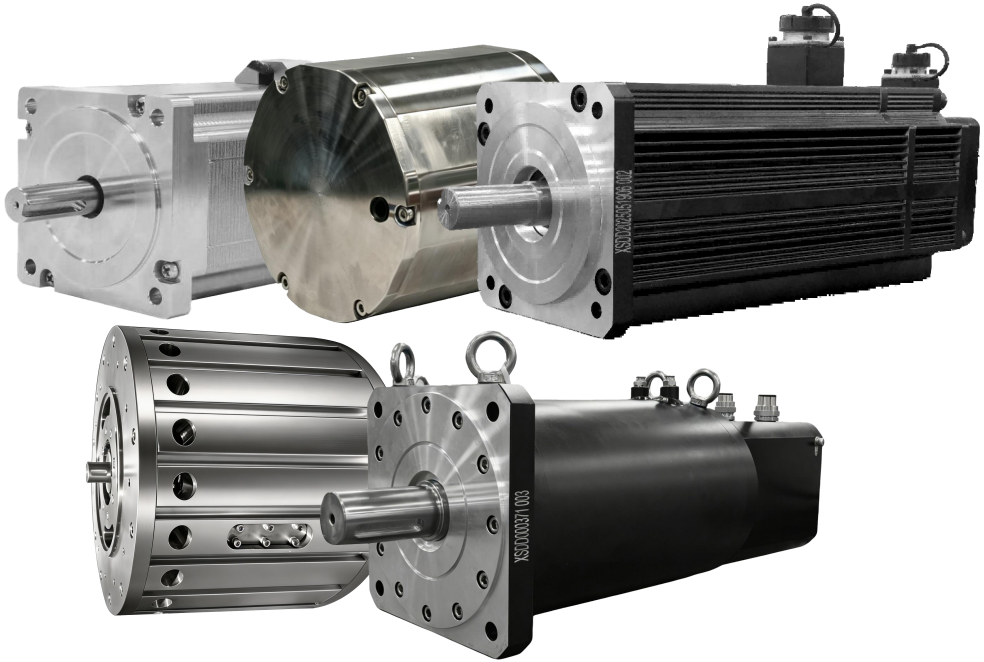

Petrochemical Applications

Application of High-Temperature Servo Motors in Resource Exploration and Extraction

The application fields of high-temperature servo motors are far broader than one might imagine — from oil wells thousands of meters underground, to satellites in space, to semiconductor production lines and operating tables, they are indispensable for precise drive in extreme environments.

Specific Scenarios

Downhole exploration equipment for oil, natural gas and coal; downhole electronic-control flow valves

Core Customer Requirements

High temperature and high pressure resistance, no additional cooling required, high reliability in confined spaces

Long-term stable operation at 150°C and above

The motor servo controller is an important part of various downhole servo equipment, and the high-temperature high-pressure downhole conditions place extremely high demands on the miniaturization, high-temperature performance and high reliability of servo control circuits. Given that motor servo control equipment in China's petroleum sector has long relied on imports, a downhole high-temperature motor servo controller was designed, used together with a servo mechanism composed of a high-temperature brushless DC motor. Tests show it can operate stably for long periods at 150°C, featuring high-temperature resistance, low temperature rise and high reliability, and it has been successfully applied on downhole electronic-control flow valve equipment. The successful application provides a reference for the engineering development of other high-temperature motor servo controllers.

Military and Aerospace Applications

Specific scenarios: satellite communications, missile guidance, unmanned vehicles, ships, aircraft/spacecraft component testing

Temperature Resistance Rating

-60°C ~ +120°C or wider

Core Customer Requirements

Adaptation to severe temperature shocks, vacuum, radiation resistance and high overload

Application Scenarios

Such scenarios require not only high-temperature resistance but are often accompanied by combined environments of low temperature, vacuum and strong vibration. Whether it is the huge temperature differences faced by satellites in space or the severe overload during missile launch, precise motor action is essential. Some products even meet cryogenic conditions of -196°C or ultra-high temperatures of +300°C.

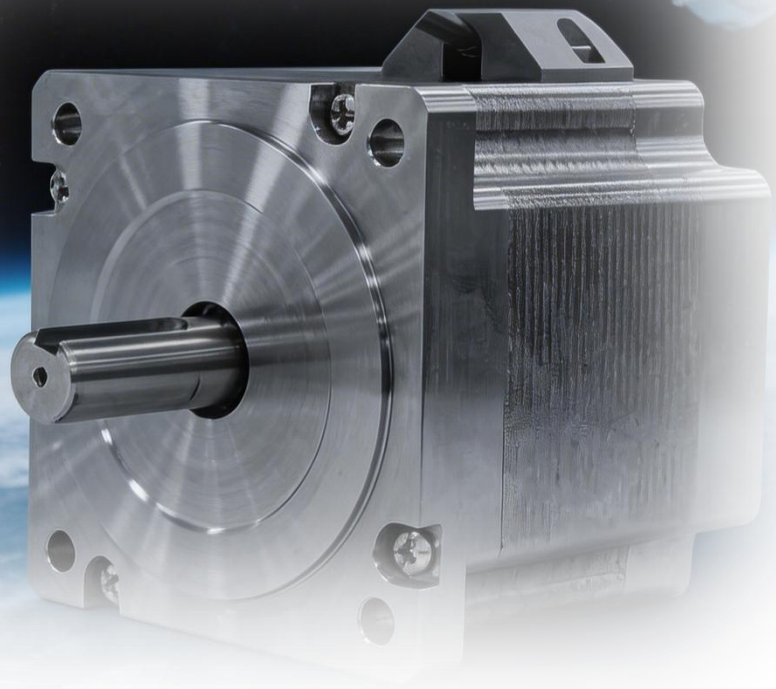

High-End Industrial Manufacturing Applications

Specific scenarios: semiconductor wafer transfer, vacuum coating machines, automotive environmental test chambers; precision injection molding machines, CNC machine tools

Temperature Resistance Rating

Class F insulation (approx. 155°C); -20°C ~ 80°C

Core Customer Requirements

High-precision positioning, IP67 and higher protection ratings, vacuum compatibility

Application Scenarios

In semiconductor manufacturing, wafer transfer and vacuum coating equipment operate in high-temperature vacuum conditions; in automotive R&D, environmental test chambers must simulate the full climate range from extreme cold to extreme heat. Such equipment relies on high-temperature servo motors to ensure positioning accuracy and long-term operational stability. Even general industrial equipment often requires IP67-rated high protection and high-temperature-resistant insulation models for dusty or oil-mist environments.

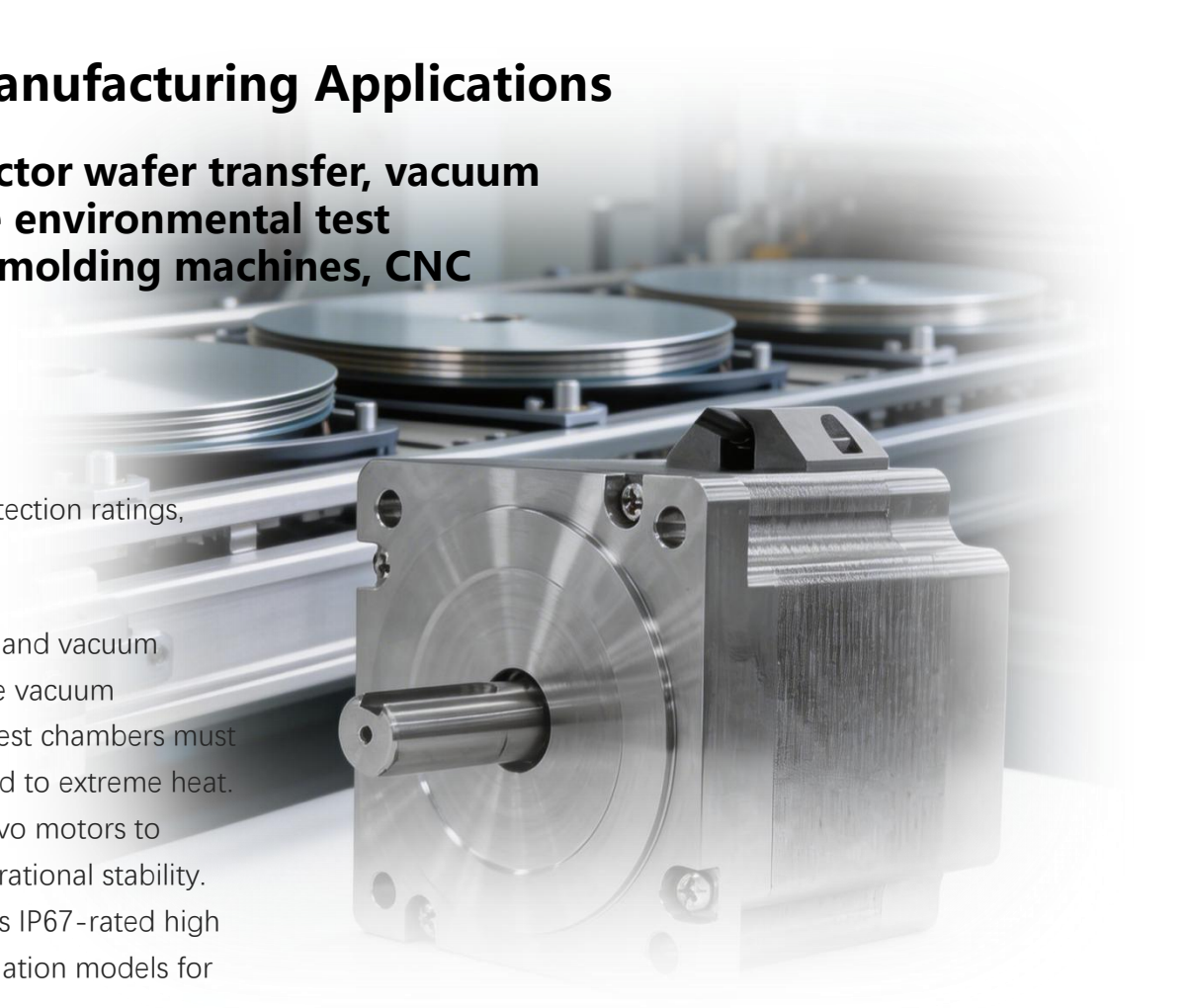

Special and Frontier Technology Applications

Specific scenarios: biomedical applications (cryo-electron microscopy, genetic sample storage), deep-sea exploration equipment, nuclear power plant / subsea pipeline inspection robots

Temperature Resistance Rating

-196°C cryogenic ~ +300°C ultra-high temperature

60°C+ long-term operation

Core Customer Requirements

Extreme temperature range adaptation, high integration, radiation resistance, salt spray resistance

Application Scenarios

Crawler robots performing weld inspection inside pipelines above 60°C, or equipment operating in deep-sea and nuclear radiation environments, all place customized demands on motor miniaturization, high-temperature resistance and long service life.

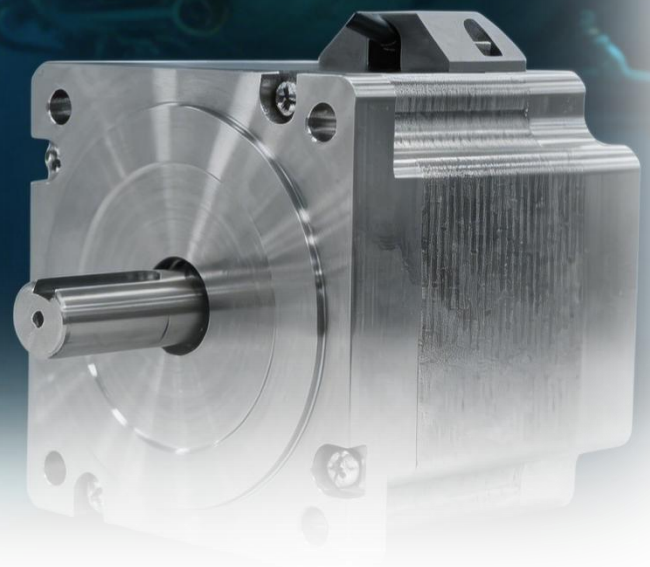

Metallurgical Industry Applications

A special motor designed for extreme conditions of high temperature, heavy dust, strong vibration and high overload in blast furnaces, converters, continuous casting, rolling mills and heat-treatment furnaces. Its core is high-temperature-resistant insulation + forced cooling + high protection + heavy-duty structure.

High-Temperature Stepper Motor
Model: 86BYG140-401H4

01 Holding Torque 8 N·m

02 Ambient temperature: -10 ~ 200°C

03 High efficiency and energy saving

04 Radiation resistance level: 5 × 10^3 Gy



Aerospace Applications

An aviation high-temperature motor is a special motor capable of continuous, reliable and efficient operation in extreme high-temperature environments from 125°C to over 300°C.

Extreme Environment Adaptability

Excellent vibration and shock resistance to withstand the huge mechanical stresses during aircraft takeoff, landing and maneuvering flight. It also resists corrosion from aviation fuel, lubricating oil, salt spray, moisture and other media.

Extremely High Power Density

Extensive use of lightweight materials such as high-strength aluminum alloys and titanium alloys, with topology optimization to remove excess material while ensuring strength and heat dissipation.

Ultra-High Reliability and Safety

Even under extreme conditions, a service life of tens of thousands of hours is required. The design considers condition-based maintenance and features powerful condition monitoring functions to support whole-life-cycle cost management of aircraft.

Excellent Electrical and Performance Characteristics

High efficiency + wide speed regulation range + low electromagnetic interference

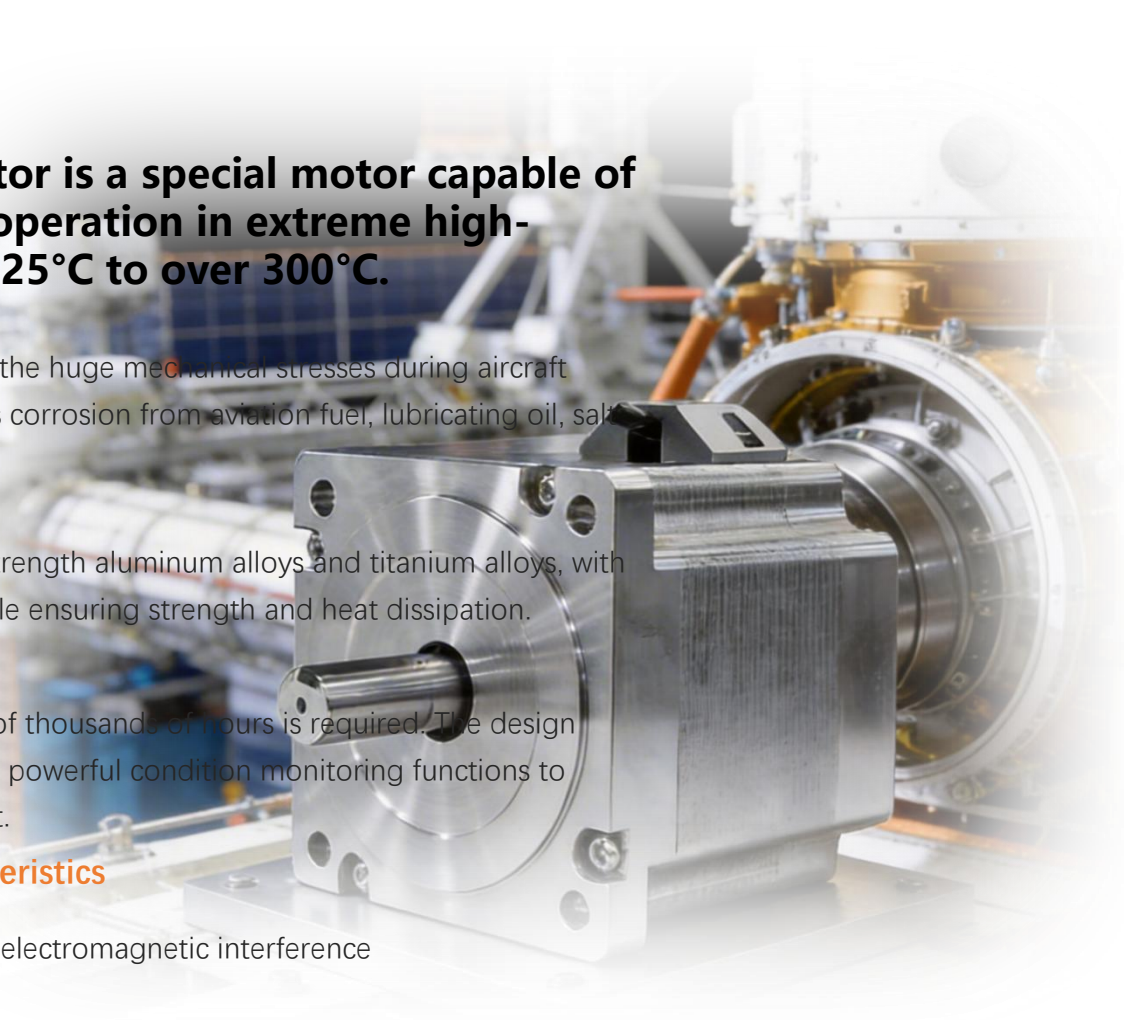

Aerospace Applications

Combustion chamber and turbine inlet temperatures of aircraft engines and rocket engines are core indicators, often requiring resistance to temperatures above 1500°C.

High-Temperature Stepper Motor
Model: 86BYG140-411H4

01 Holding Torque 9.2 N·m

02 Ambient temperature: -10 ~ 200°C

03 High efficiency and energy saving

04 Radiation resistance level: 5 × 10^3 Gy

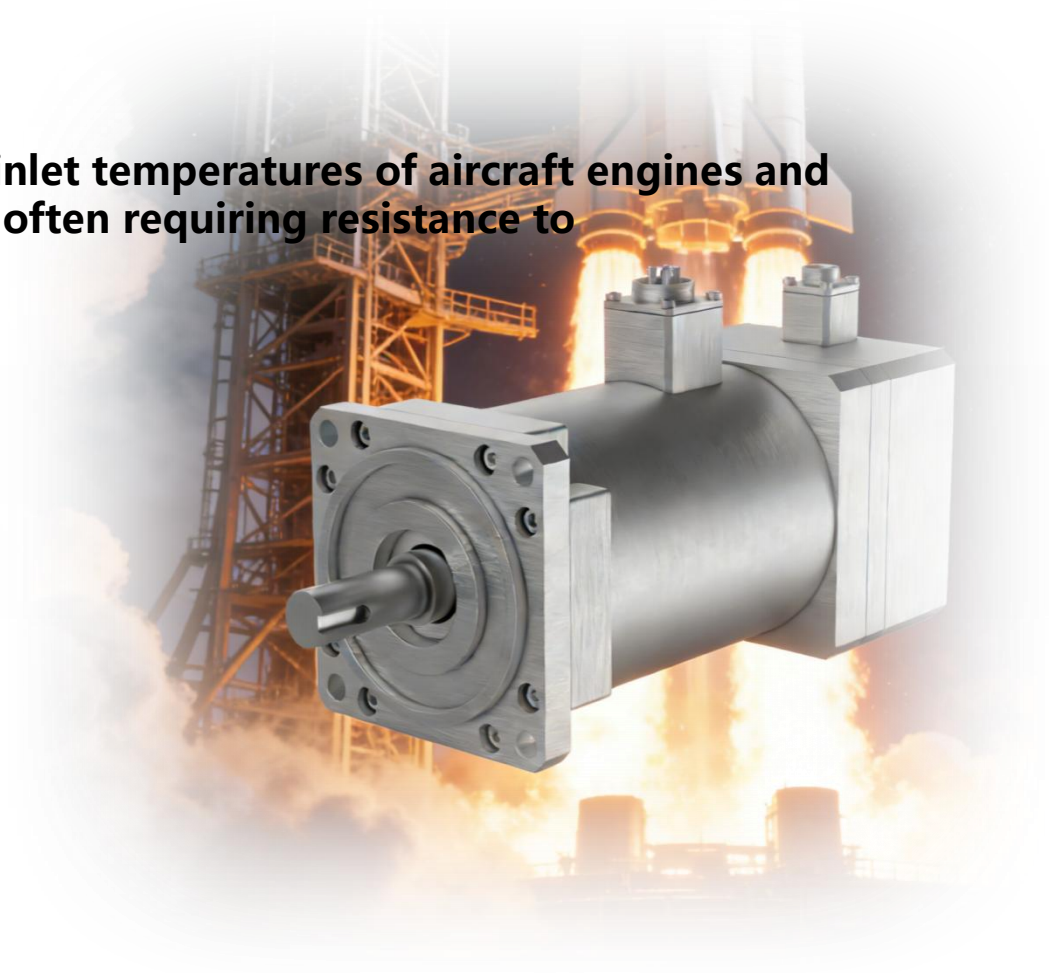

Glass Industry Applications

The design core of high-temperature motors for the glass industry is to maintain long-term, reliable and stable operation in extreme environments.

Excellent High-Temperature Resistance

High insulation class: H-class (180°C) or higher insulation systems such as C-class (>180°C) are typically used. Insulating materials such as mica, glass fiber and high-temperature-resistant enameled wire can work long-term at high temperatures without aging failure.

High-temperature bearings: high-temperature bearing steels such as Cronidur 30 are selected, together with special high-temperature grease or solid lubrication technology. Ordinary grease would leak or carbonize at high temperatures, causing bearing seizure.

High-temperature enameled wire: high-temperature-resistant magnet wires such as polyimide or modified polyester are used.

Heat dissipation design: the cooling fin structure is optimized, and an independent forced cooling system is often equipped (such as an external centrifugal fan for forced air cooling, or a water-cooling jacket / air-water cooling device) to quickly remove internal heat and keep the internal temperature rise within the allowable limit of the insulation.

Corrosion and Contamination Resistance Design

Anti-corrosion surface treatment: metal parts such as the housing and fan cover often use high-temperature anti-corrosion coatings or stainless steel to resist corrosion from alkaline vapors released by molten glass (such as Na_2O) and humid environments.

Anti-sticking: the housing is designed with a smooth surface that resists accumulation of dust and contaminants, making cleaning easy.

Robust Structure and Reliability

Heavy-duty design: the overall structure is more robust, able to withstand vibration and mechanical shock of glass production lines.

Wide voltage design: adapts to fluctuations of the industrial power grid, ensuring normal operation even with unstable voltage.

High starting torque: to drive loads such as fans and roller tables, it usually has high starting torque and overload capacity.

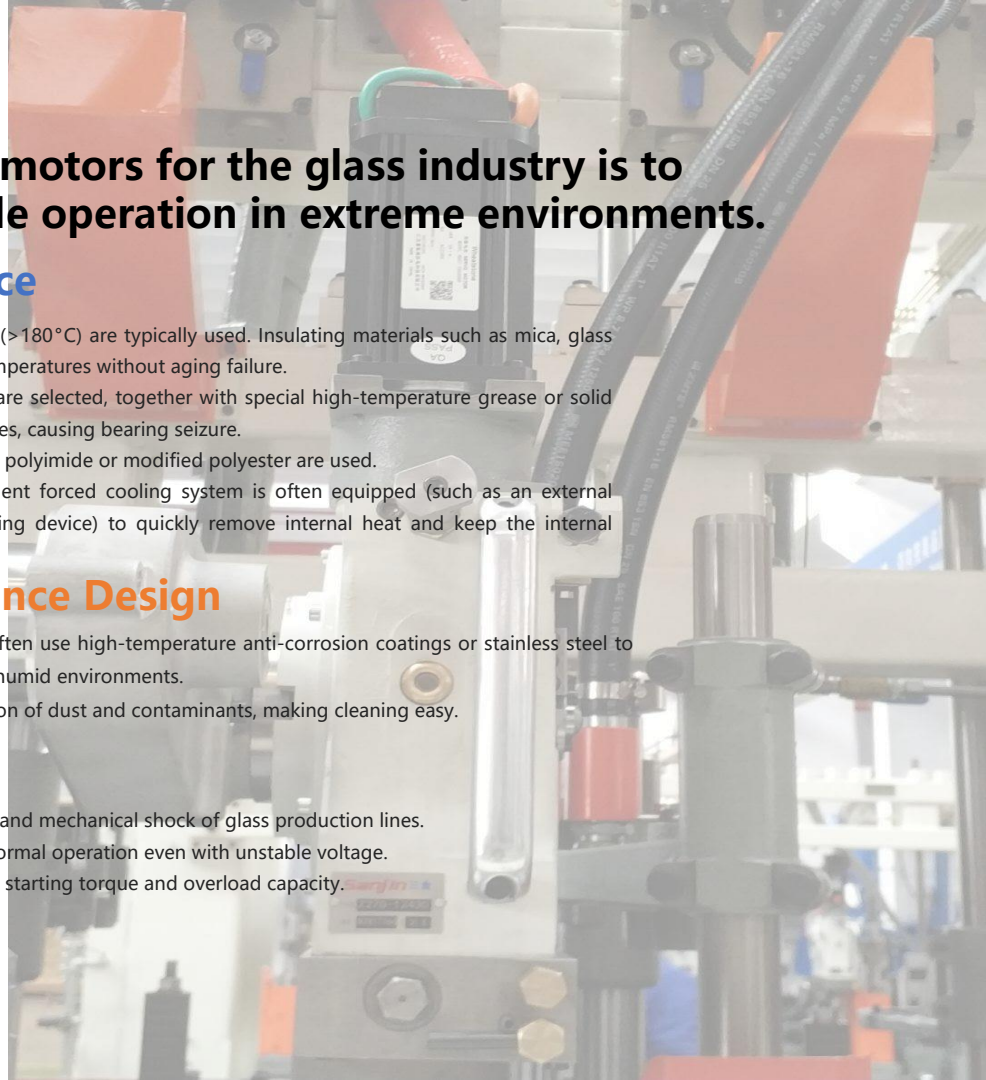

Power Industry Applications

The design goal of high-temperature motors for the power industry is to ensure continuous, uninterrupted and safe operation for several years of key power-generation auxiliary equipment (such as fans and water pumps) under multiple harsh conditions including boiler radiant heat, high-temperature flue gas, heavy dust, high humidity and corrosive gases. It is the key to power plant safety and economy.

Extreme High-Temperature Resistance and Efficient Heat Dissipation

Diverse heat sources: the motor may be subjected to radiant heat from the boiler body (ambient temperature up to over 60°C), conductive heat from the conveyed medium (such as hot air and flue gas), and temperature rise from its own operation.

Ultra-high insulation class: H-class (180 ° C) or higher insulation is generally adopted. The insulation systems of motors in key positions such as induced draft fans are extremely demanding.

Excellent Shaft Sealing Design

Composite seals are used, such as labyrinth seal + fluoroelastomer skeleton oil seal or carbon ring seal, effectively preventing dust from entering the bearing chamber and grease leakage, which is the key to long bearing life.

High Reliability and Long Service Life Design

Heavy-duty structure: cast frame with high rigidity and low vibration, able to withstand long-term operation and system impact.

Bearing system: heavy-duty bearings from brands such as SKF/FAG are selected, with calculated life typically required to exceed L10 > 100,000 hours. The lubrication system is well designed for easy maintenance.

